-NOTES-

1. HOT DIP GALVANIZE PER ASST. A153 LATEST REVISION.
1. 1 1/2" SQUARE SHAFT TYPICAL WORKING 5,500 FT..

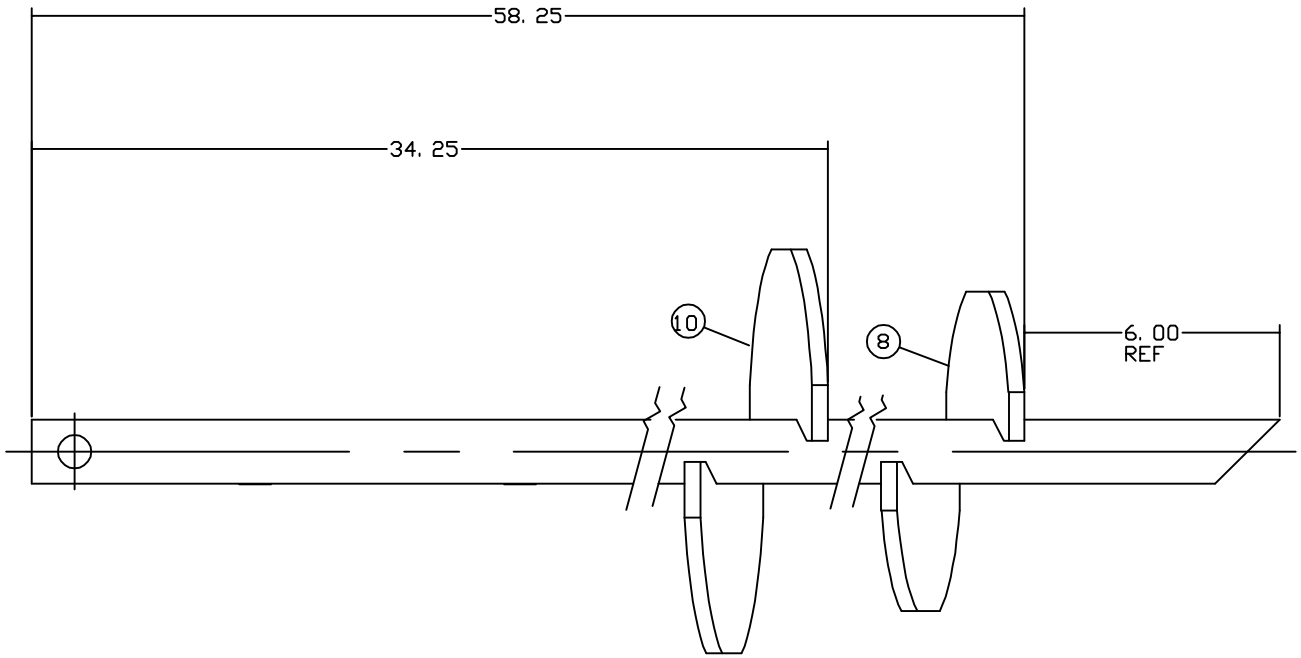

14570	12-19-06	DVH	HAMILTON
EC #	DATE	CHG BY	RESP ENG

DESC OF DWG:
CREATE SA012642AEJ
--
--
--
REASON (S) FOR CHANGE: MATCH CUSTOMER SPEC
DISPOSITION OF MAT'L: NEW ITEM

AREAS AFFECTED BY LATEST EC	Y	N
S.P.C.	-	X
F.A.I.	-	X
TOOL/EQUIP	-	X
SUPPLIER	-	X
GAUGES	-	X
PRCS PROC	-	X
PKG/LABEL	-	X
INSP/TEST	-	X

CHANCE®
TOLERANCE CHART
.X ± .060 FRAC ±1/16 ANGLES ±2°
.XX ± .030 ADD DRAFT (UNLESS NOTED)
.XXX ± .005 CASTING 3° FORGINGS 7°

CONFIDENTIAL: THIS DRAWING AND ITS CONTENTS ARE CONFIDENTIAL AND THE EXCLUSIVE PROPERTY OF HUBBELL POWER SYSTEMS. NO PUBLICATION, DISTRIBUTION OR COPIES MAY BE MADE WITHOUT THE WRITTEN CONSENT OF HUBBELL POWER SYSTEMS. HUBBELL POWER SYSTEMS UNPUBLISHED ALL RIGHTS RESERVED UNDER THE COPYRIGHT LAWS.

HUBBELL® POWER SYSTEMS

TITLE
ANCHOR
MULTI- HELIX

SIZE	DWG NO.	CAT / PART / ASSY NO.	REV
B	SA012642AE5	012642AE5	--

DO NOT SCALE THIS DRAWING	DRN BY DVH	DATE 12-19-06	SHEET 1 OF 1

12.5