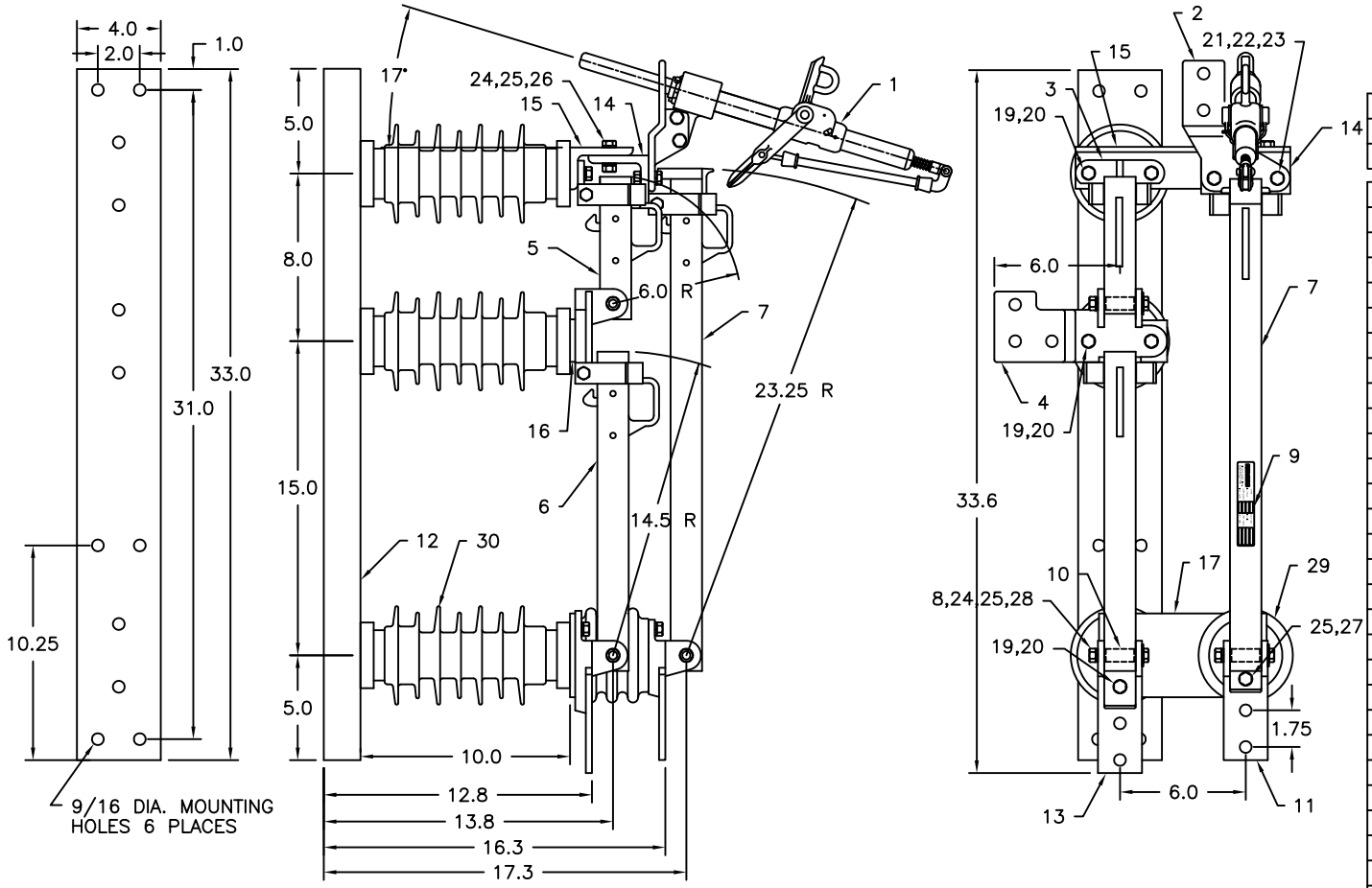

RATING DATA	
CAT. NO.	675CT
INTERRUPTING, AMPS	600
MAXIMUM kV	15
kV BIL	110
CONTINUOUS , AMPS	600
MOMENTARY, AMPS	40,000
SWITCH WEIGHT	66 LBS

QTY	PART NO.	ITEM	MATERIAL	DESCRIPTION
2	5499	32		CARTON INSERT
1	5149-01	31		B1 CARTON
		PACKING		
3	8566	30		INSULATOR; 110 kV BIL
1	8515	29		INSULATOR
3	8340	28	S.S.	H.H.F.M.B. 3/8-16 X 3
4	8315	27	S.S.	H.H.F.M.B. 3/8-16 X 1
2	8311	26	S.S.	H.H.F.M.B. 3/8-16 X 1-1/4
9	8310	25	S.S.	S.L.W. 3/8
5	8309	24	S.S.	F.H.N. 3/8-16
2	8306	23	S.S.	H.H.F.M.B. 1/2-13 X 1-1/2
2	8120	22	S.S.	S.L.W. 1/2
2	8119	21	S.S.	F.H.N. 1/2-13
6	8093	20	G.S.	H.H.F.M.B. 1/2-13 X 1-1/4
12	8013	19	G.S.	S.L.W. 1/2
6	8010	18	G.S.	H.H.F.M.B. 1/2-13 X 1
1	5008	17		HINGE BAR
1	5007	16		SPACER
1	5006-01	15		JAW ANGLE
1	4938-01	14		ANGLE
1	4864-02	13		HINGE
1	4817-01	12		BASE
1	4334-04	11		HINGE
3	4262	10		SPACER
1	4200	9		NAMEPLATE
3	4051	8		SPRING WASHER
1	2451-1NL-2350	7		BLADE ASSEMBLY
1	2451-1N-1525	6		BLADE ASSEMBLY
1	2451-1N-0680	5		BLADE ASSEMBLY
1	2369-02	4		HINGE-JAW ASSEMBLY
1	2358-02	3		BY PASS JAW ASSEMBLY
1	2076-08	2		R.H. JAW ASSEMBLY
1	250	1		SAF-T-GAP INTERRUPTER

NOTES:

1. CLEAN ALL 3 CONTACT SURFACES AND COAT WITH EJC #2.
2. LUBRICATE HINGE CONTACT SURFACES, BLADE END AND CONTACTS WITH FS-1292 OR EQUAL.

SIEMENS

TITLE: TYPE B1 SWITCH VOLTAGE REG. BYPASS SWITCH

675CT

DRN. PF
DATE 3/3/05
APP. WH
DATE 3/3/05

TOLERANCES UNLESS SPECIFIED
.X .06 FRAC.±1/16
.XX .03 ANGLE±2°
.XXX .005
CASTING DRAFT 3°
SURFACE FINISH 125

MATERIAL
FINISH

ASS'Y SCALE: 1/6

B- 675CT

NO.	DATE	DESCRIPTION	BY	APP.
D	3/23/09	REMOVED CRATE AND ADDED 5149-01 AND 5499/ADDED SWITCH WEIGHT	DD	

PROPRIETARY: THE INFORMATION CONTAINED IN THIS DRAWING IS THE PROPERTY OF SIEMENS ENERGY, INC. ANY REPRODUCTION WITHOUT THE WRITTEN CONSENT OF SIEMENS ENERGY, INC. IS PROHIBITED, EXCEPT THAT THE CUSTOMER MAY MAKE COPIES FOR USE SOLELY IN THE INSTALLATION, MAINTENANCE, AND OPERATION OF PRODUCTS SUPPLIED BY SIEMENS ENERGY, INC. 99 BOLTON SULLIVAN DR. HEBER SPRINGS AR 72543 USA PH 501-362-8296