COPYRIGHT © UNPUBLISHED ALUMA-FORM, Inc. MEMPHIS, TENNESSEE U.S.A. ALL RIGHTS RESERVED

DUPLICATION, DISTRIBUTION OR ALTERATION OF THIS DOCUMENT BY ANY MEANS, IN WHOLE OR IN PART, IS STRICTLY FORBIDDEN. ALL INFORMATION HEREIN DISCLOSED, WHETHER PATENTABLE OR OTHERWISE, IS THE CONFIDENTIAL, PROPRIETARY AND INTELLECTUAL PROPERTY OF ALUMA-FORM, INC. ANY USE OR PUBLICATION OF THIS DOCUMENT OR CONTAINED INFORMATION, WITHOUT FIRST OBTAINING EXPLICIT WRITTEN AUTHORIZATION FROM ALUMA-FORM, INC. , IS ABSOLUTELY FORBIDDEN.

NOTE:
1. GENERAL VIEWS SHOWN WITHOUT WILDLIFE CAP FOR HARDWARE ILLUSTRATION
2. ALL DIMENSIONS FOR REFERENCE ONLY
3. TOP AND BOTTOM NUT SHALL BE HAND TIGHTENED ONLY ENOUGH TO SECURE WASHERS

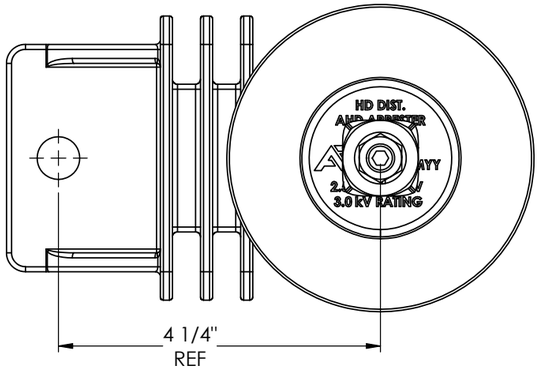

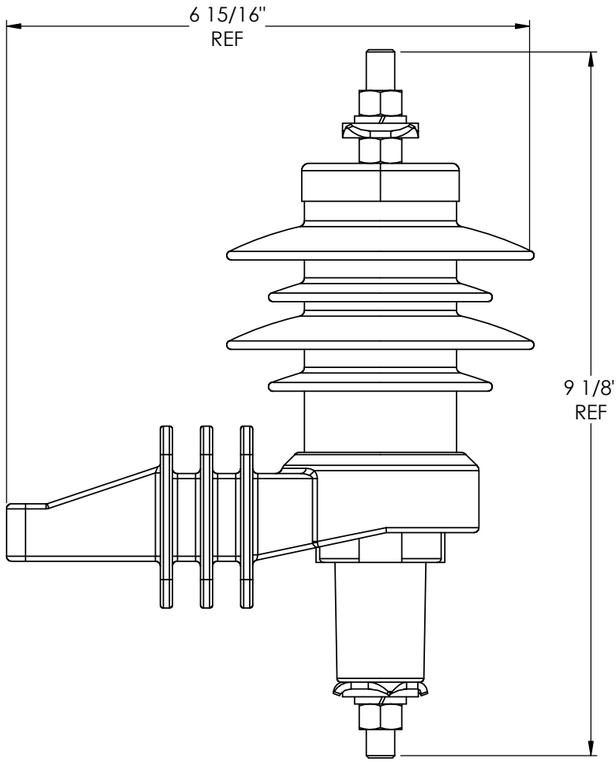

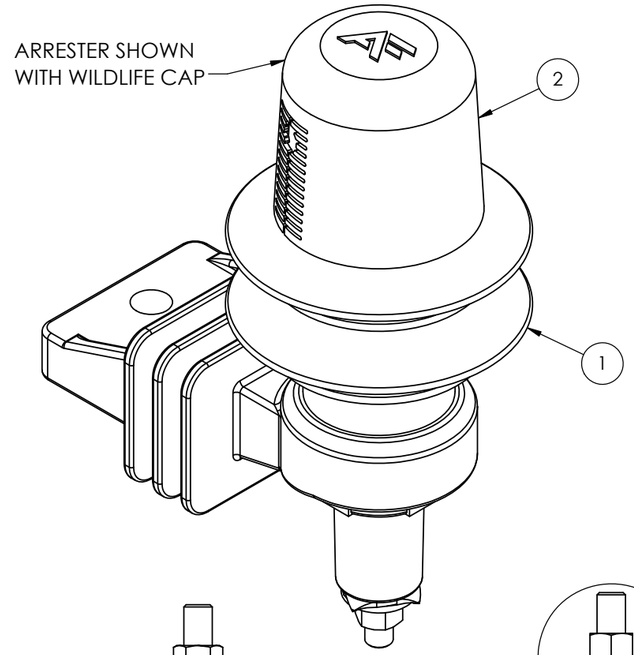

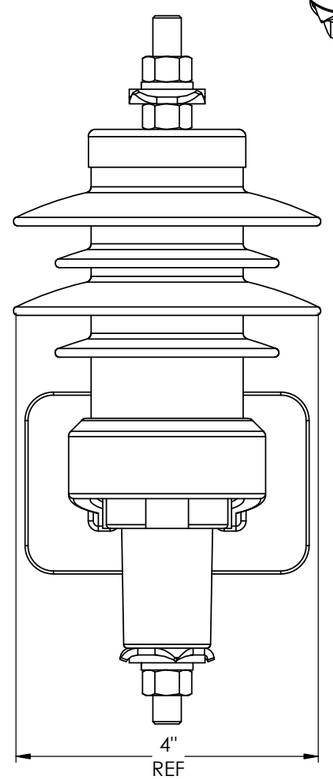

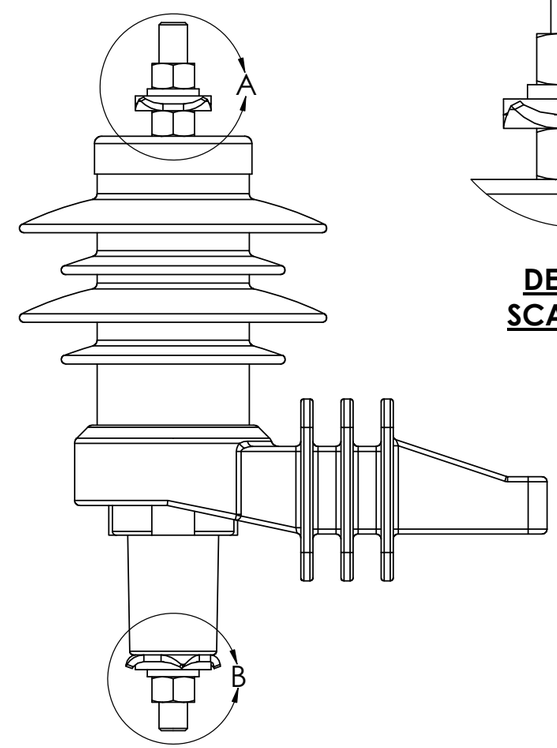

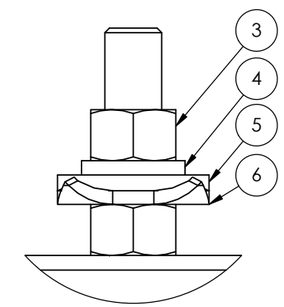

DETAIL A
SCALE 1 : 1

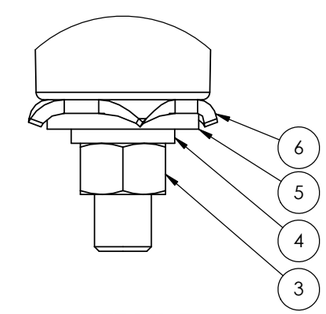

DETAIL B
SCALE 1 : 1

ITEM NO.	PART NUMBER	DESCRIPTION	QTY
1	46039-01	A-HD-03A-1G, ASSEMBLY	1
2	25224	WILDLIFE CAP, ARRESTER	1
3	30541	NUT, HEX, 3/8" Silicon Bronze	2
4	30398	3/8" REGULAR HELICAL LOCKWASHER, S.S.	2
5	30396	3/8" TYPE "A" WIDE FLATWASHER, S.S.	2
6	30420	WIRE CLAMP, ARRESTER	2
-	67777-01	LABEL, ARRESTER RATING, 3kV	1
-	67778-01	LABEL, ARRESTER TYPE, HD	1

UNLESS OTHERWISE SPECIFIED, STANDARD ALUMA-FORM, INC. MANUFACTURING TOLERANCES APPLY

CHANGE / REVISION DESCRIPTION	JOB NUMBER -	ALUMA-FORM, Inc. 3625 OLD GETWELL ROAD MEMPHIS, TN 38118-6072 U.S.A.	SCALE 1:4	DESCRIPTION HD ARRESTER, AHD-03A-1GX-3X1-3X
	REVISION - / DRAWING NUMBER 541231		PROJECT CODE / WEIGHT 2.41	MATERIAL / SECTION
		LYW DRAWN BY / 7789 RELEASE E.A. / 3-MAR-22 RELEASE DATE	REVISED BY / REVISED E. A. / REVISED DATE	REVIEWED / APPROVED / 541231 DRAWING NUMBER / - REVISION