Express 250

Specifications and Ordering Information

Express 250

Ordering Information

The order codes below represent specific product configurations. Other product options are available. Please contact ChargePoint Sales for information and order codes.

Hardware

Description		Order Code
Model	Express 250 Station includes 2x Power Modules, 1x CCS1 cable, 1x CHAdeMO cable (NA)	CPE250C-625-CCS1-CHD
	Express 250 Station includes 2x Power Modules, 1x CCS2 cable, 1x CHAdeMO cable (EU)	CPE250C-625-CCS2-CHD
Option	Other cable combinations are available using CCS1, CCS2 and CHAdeMO connectors	Please contact ChargePoint sales

Software & Services

Description	Order Code
ChargePoint Cloud Plan	Please contact ChargePoint sales
ChargePoint Assure — Prepaid Assure Plan for one Power Module. Express 250 requires 2x EXPRESS-ASSUREn to cover the two Power Modules and the CPE250 station.	EXPRESS-ASSURE*n*[1]
ChargePoint Assure — Assure Plan for one Power Module and invoiced annually. Express 250 requires 2x EXPRESS-ASSUREn to cover the two Power Modules and the CPE250 station	EXPRESS-ASSUREN-COMMIT[1]
Station Activation and Configuration	CPSUPPORT-ACTIVE
ChargePoint Station Installation and Validation	CPE250-INSTALLVALID

Note: All CPE250 stations require a cloud plan.

*Substitute *n* for desired years of service (1, 2, 3, 4 or 5 years).

Order Code Information

If ordering this…	…the order code is
Express 250 Station includes 2x Power Modules, 1x CCS1 cable, 1x CHAdeMO cable (NA)	CPE250C-CCS1-CHD
3 years of prepaid Assure coverage upon successful site validation. Assure covers Power Modules & station. Express 250 requires 2x EXPRESS-ASSURE3 for its 2 Power Modules.	2 x EXPRESS-ASSURE*3*
Station Activation and Configuration	CPSUPPORT-ACTIVE

Architectural Drawings (Dimensions)

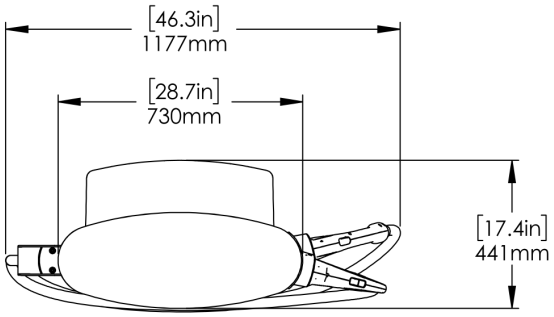

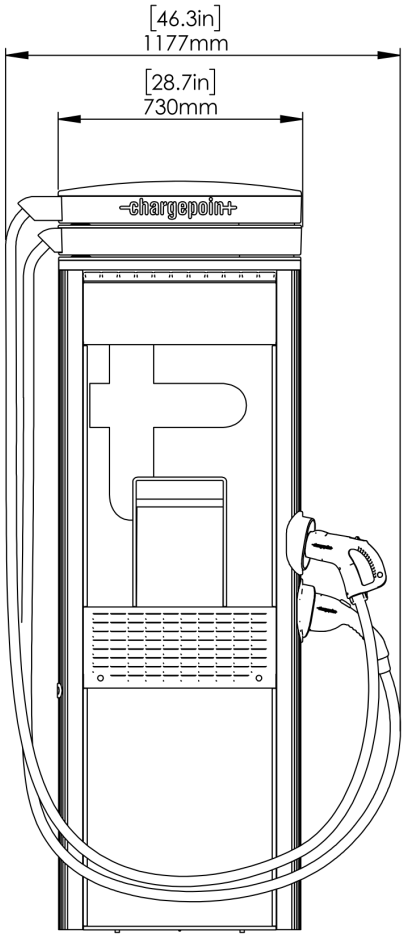

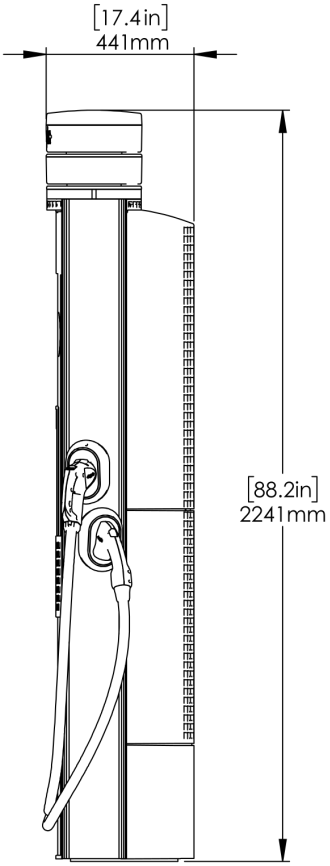

General Specifications

Station Electrical Input

Input Rating	400V AC, 3-phase, 96A, 50 Hz 480V AC, 3-phase, 80A, 60 Hz
Wiring	L1, L2, L3, Neutral & Earth

Station Electrical Output

Max Output Power	62.5 kW
Output Voltage, Charging	200–1,000V DC
Max Output Current	156A
Max Modules per Station	2

Paired Station Electrical Output

Paired Max Output Power	125 kW
Paired Max Output Current	CCS1: 174A or 200A CCS2: 200A CHAdeMO; US: 140A, EU: 125A

Power Module

Max Output Power	31.25 kW
Max Output Current	78 A
Power Conversion Efficiency	> 95%
Power Factor	0.99 at full load
Harmonics	iTHD < 5% (Complies with IEEE 519 Requirements)
Power Module Cooling	Liquid Cooling Technology

Functional Interfaces

Max Connector Types per Station	Up to two different connector types per station
Supported Connector Types	CHAdeMO, CCS1 (SAE J1772™ Combo), CCS2 (IEC 61851-23)
Cable Length with Swing Arm*	Full Horizontal Reach: 4.27m (14')
LCD Display	Full-color 254 mm (10 in) display for driver interaction
Top Display	Full-color 508 mm (20 in) LED display for notifications
Authentication	RFID: ISO 15693, ISO 14443, NEMA EVSE 1.2-2015 (UR) Tap to Charge (NFC on Apple & Android): 15118-1 (EIM) Remote: Mobile and in vehicle (if supported by vehicle)

*Horizontal reach to typical vehicle charging port: 3.76 (12'4")

Connectivity Features

Vehicle Safety Communication	CHAdeMO – JEVS G104 over CAN, CCS1 – SAE J1772 over PLC and CCS2 — IEC 61851-23
Plug-Out Detection	Power terminated per JEVS G104 (CHAdeMO), SAE J2931 (CCS1) and IEC 61851-23 (CCS2)
Local Area Network	2.4 GHz and 5 GHz WiFi (802.11 b/g/n)
Wide Area Network	4G LTE (fall back to 3G GSM)
Supported Communication Protocols	OCPP
Service and Maintenance	Remote system monitoring, diagnostic, and proactive maintenance

Safety and Operational Ratings

Station Enclosure Rating	Type 3R, IP54
Station Impact Rating	IK10
Safety and Compliance	UL and cUL listed: complies with UL 2202, UL 2231-1, UL 2231-2, CSA 107.1 CE marking: complies with IEC 62196, IEC 61851
Station Surge Protection	Tested to IEC 6100-4-5, Level 5 (6 kV @ 3,000A). In geographic areas subject to frequent thunder storms, supplemental surge protection at the service panel is recommended.
EMC Compliance	U.S.: FCC part 15 Class A; EU: EN55011, EN55022 and IEC61000-4
Cooling	Liquid Cooling Technology

Storage Temperature	-40°C to 50°C (-40°F to 122°F)
Operating Temperature	-30°C to 50°C (-22°F to 122°F)
Operational Altitude	<3,000 m (<9,800 ft)
Operating Humidity	Up to 95% @ 50°C (122°F) non-condensing

Generic Specifications

Station Enclosure Dimensions	2,230 mm x 712 mm x 420 mm (7'4" x 2'4" x 1'4")
Power Module Dimensions	760 mm x 430 mm x 130 mm (2'6" x 1'5" x 5")
Station Weight (without Power Modules)	250 kg (551 lb)
Power Module Weight	45 kg (98.5 lb)

Energy Management Features

Dynamic Power Management	Allows a fixed maximum power output per station or lets the system dynamically manage the power distribution per station
Remote Energy Management	Manage output power via the ChargePoint Admin Portal, API, and Open ADR 2.0b VEN

ChargePoint, Inc. reserves the right to alter product offerings and specifications at any time without notice, and is not responsible for typographical or graphical errors that may appear in this document

ChargePoint, Inc.
240 East Hacienda Avenue
Campbell, CA 95008-6617 USA

+1.408.841.4500 or
+1.877.370.3802 US and Canada toll-free

chargepoint.com

Contact Us

Visit chargepoint.com

Call +1.408.705.1992

Email sales@chargepoint.com

Copyright © 2019 ChargePoint, Inc. All rights reserved. CHARGEPOINT is a U.S. registered trademark/service mark, and an EU registered logo mark of ChargePoint, Inc. All other products or services mentioned are the trademarks, service marks, registered trademarks or registered service marks of their respective owners. October 2019.

* Listed by Underwriters Laboratories Inc.