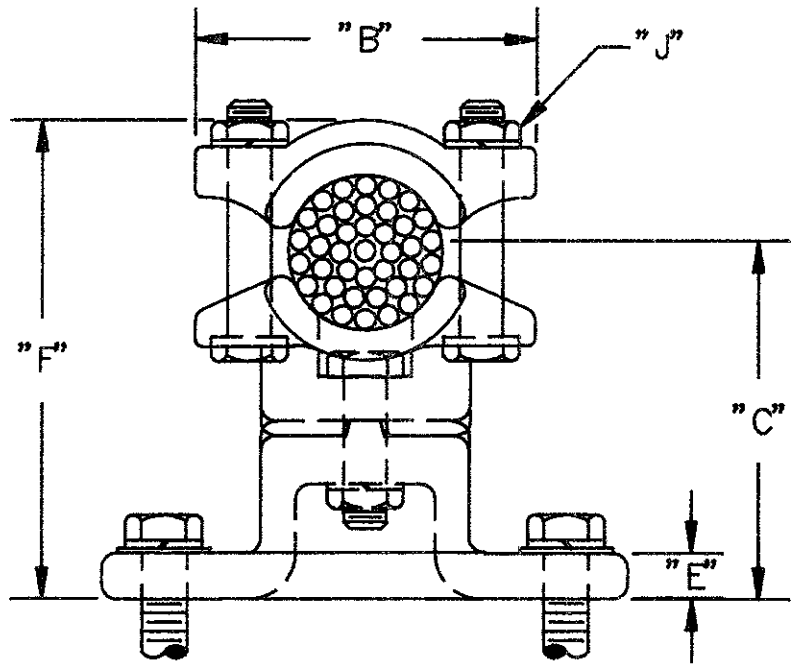

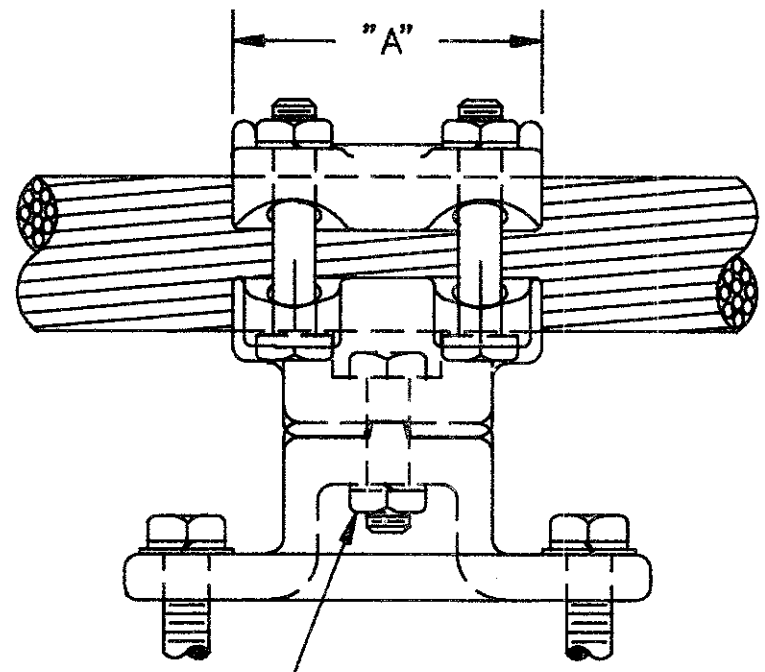

SHOP NOTE
TORQUE TO 480 IN.LBS.

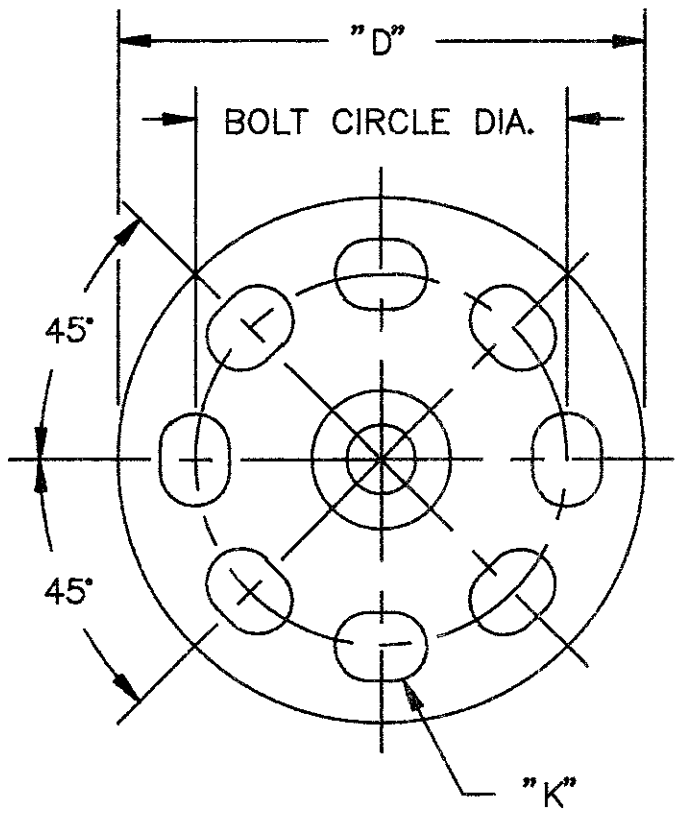

NOTES:

1. MATERIAL: CASTINGS– 123 RED BRASS
   CLAMPING HARDWARE– SILICON BRONZE & STAINLESS STEEL
   MOUNTING HARDWARE– GALVANIZED STEEL
2. NORMALLY SUPPLIED WITH HARDWARE FOR MOUNTING TO CAP OF INSULATOR, WHEN MOUNTING TO BASE OF INSULATOR ADD "B" TO CATALOG NUMBER (EXAMPLE CSSB–100–3–B).

CATALOG NUMBER	CONDUCTOR		BOLT CIRCLE DIA.	DIMENSIONS IN INCHES							
	CABLE SIZE	IPS SIZE		A	B	C	D	E	F	J	K
CSSB–100–3	800–1000 MCM	3/4"	3"	2 1/2	2 3/4	2 7/8	4 1/4	3/8	3 15/16	3/8	9/16 x 3/4
CSSB–100–5	800–1000 MCM	3/4"	5"	2 1/2	2 3/4	2 7/8	6 1/4	3/8	3 15/16	3/8	11/16 x 7/8

REVISIONS

E.C.N. NUMBER	DATE	NO.	DESCRIPTION	BY

E.C.N. NUMBER	DATE	NO.	DESCRIPTION	BY
...				
SW	5-11-94	1	ADDED CSSB-100-5	

DATE : 9-13-93 R/1
DWN BY : SW CKD BY : RH
APPROVED : JAF
SCALE NTS

BUS SUPPORTS
CABLE OR TUBE TO BOLT CIRCLE

ANDERSON
SQUARE D COMPANY
LEEDS ALABAMA

CAT. NO. CSSB-TAB DWG. NO. C-15178